SPRAYSAFE 1300
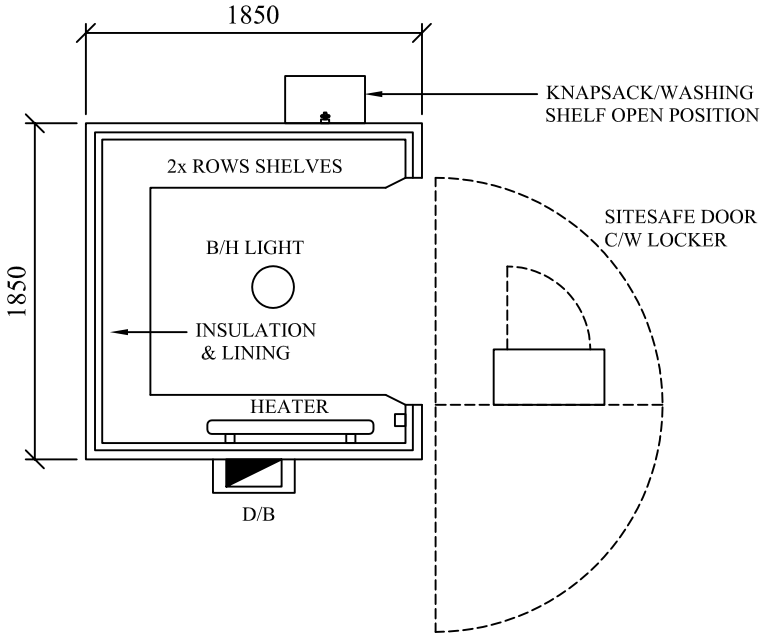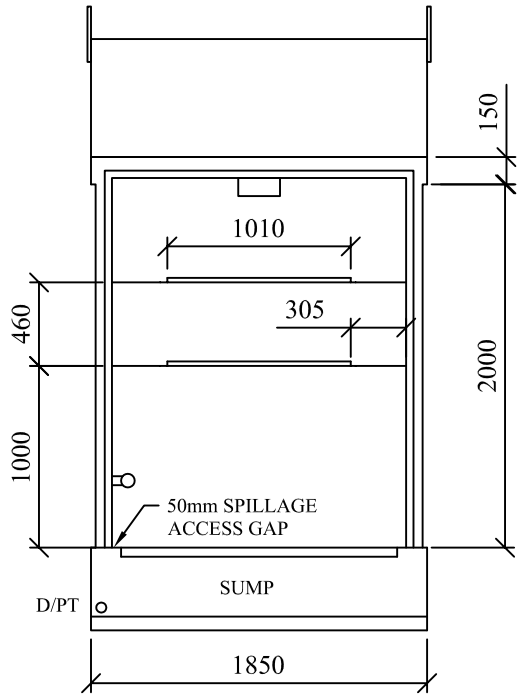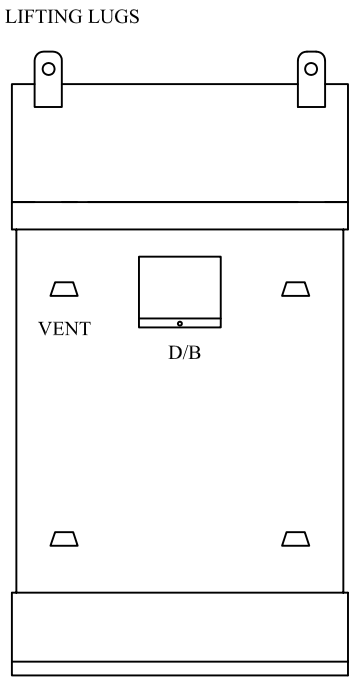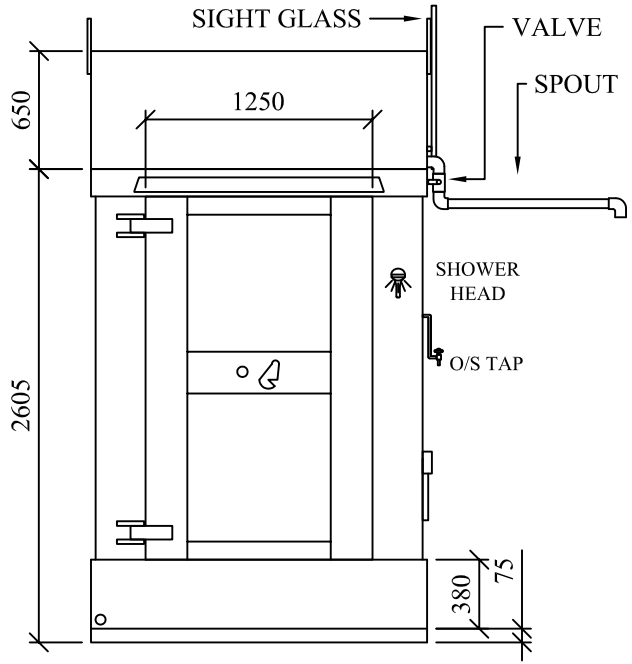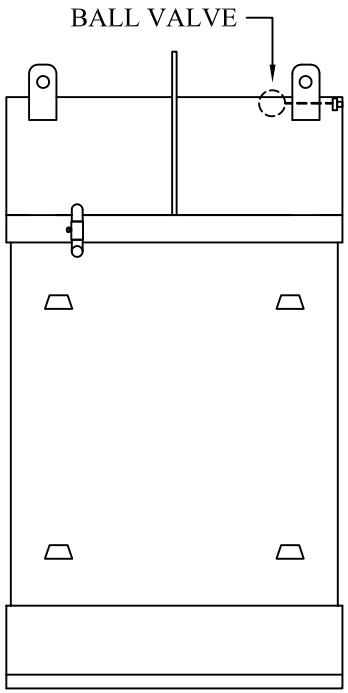
EXTRA COST FOR ELECTRICS & INSULATION